Parts List		
STOCK No	DESCRIPTION	QTY
2F1004	M6 x 25mm Hexagon bolt	4
2F1204	M8 Lock Nut	4
2F1211	M6 Nut	4
2P1005	Plunger Ally 25mm	1
2P1029	Plunger Ally 19mm	1
2P1030	Plunger Ally 29mm	1
2P1036	Plunger Ally 15mm	1
2S2012	O Ring	2
2S2025	O Ring	1
2S2132	Reducer Seal	1
2S2134	U Type Seal	1
2S2150	Dump Valve Diaphragm	1
3B5106	Bulkhead Bung	1
3P1099	Offset Plunger Ally 29mm	1
3P1105	Piston (including air return fitting)	1
3P1108	Offset Plunger Ally 46mm	1
3P1113	Offset Plunger Ally 36mm	1
3R4009	Threaded Backing Ring	1
3R4010	Reducer	1
3T3500	Coiled Tube	1
4AP1343	Frame Assembly (Red)	1
4B1200	Air Gun Butt Assembly	1
7A1500	Dump Valve Body assembly	1

Parts List		
STOCK No	DESCRIPTION	QTY
7A1503	Regulator Assembly (including O ring and washer)	1
7A1506	Spool valve assembly	1
7A2000	Standard Nut and Tail Connection	1
7A2001	European Quick Release Fitting Assembly	1
7A2002	US Quick Release Fitting Assembly	1
7B6030	Rear Barrel 220mm	1
7C1001	Air Gun Back Cap	1
7R1189	Rod 187mm	2
7XS012	Barrel Strap Assembly (inc screws and nuts)	1

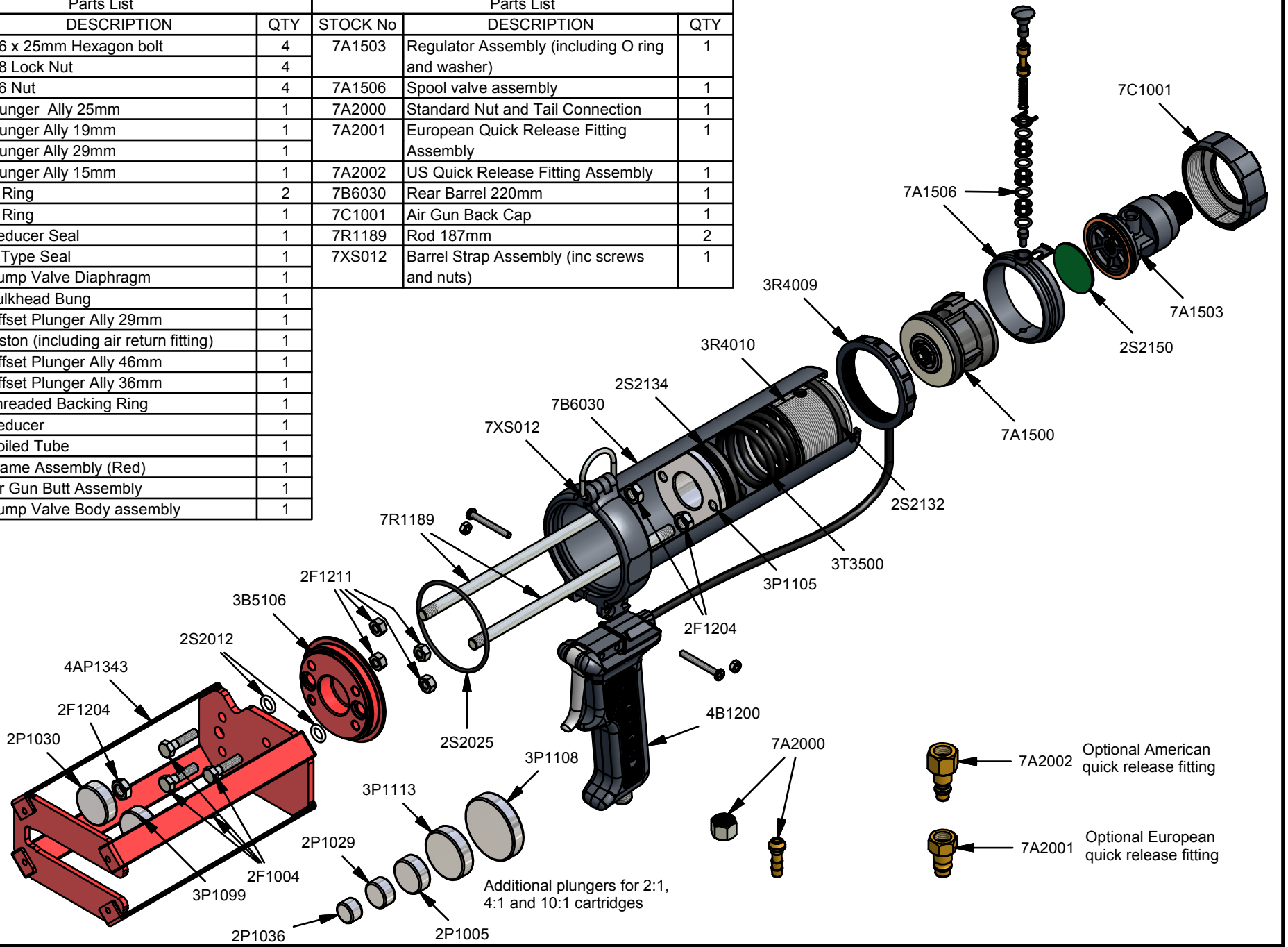

VBA 200 B MR

Quality Sealant Applicators

REV	DATE
A	14/11/2003

Parts List		
STOCK No	DESCRIPTION	QTY
2F1004	M6 x 25mm Hexagon bolt	4
2F1204	M8 Lock Nut	4
2F1211	M6 Nut	4
2P1005	Plunger Ally 25mm	1
2P1029	Plunger Ally 19mm	1
2P1030	Plunger Ally 29mm	1
2P1036	Plunger Ally 15mm	1
2S2012	O Ring	2
2S2025	O Ring	1
2S2132	Reducer Seal	1
2S2134	U Type Seal	1
2S2150	Dump Valve Diaphragm	1
3B5106	Bulkhead Bung	1
3P1099	Offset Plunger Ally 29mm	1
3P1105	Piston (including air return fitting)	1
3P1108	Offset Plunger Ally 46mm	1
3P1113	Offset Plunger Ally 36mm	1
3R4009	Threaded Backing Ring	1
3R4010	Reducer	1
3T3500	Coiled Tube	1
4AP1343	Frame Assembly (Red)	1
4B1200	Air Gun Butt Assembly	1
7A1500	Dump Valve Body assembly	1

Parts List		
STOCK No	DESCRIPTION	QTY
7A1503	Regulator Assembly (including O ring and washer)	1
7A1506	Spool valve assembly	1
7A2000	Standard Nut and Tail Connection	1
7A2001	European Quick Release Fitting Assembly	1
7A2002	US Quick Release Fitting Assembly	1
7B6030	Rear Barrel 220mm	1
7C1001	Air Gun Back Cap	1
7R1189	Rod 187mm	2
7XS012	Barrel Strap Assembly (inc screws and nuts)	1

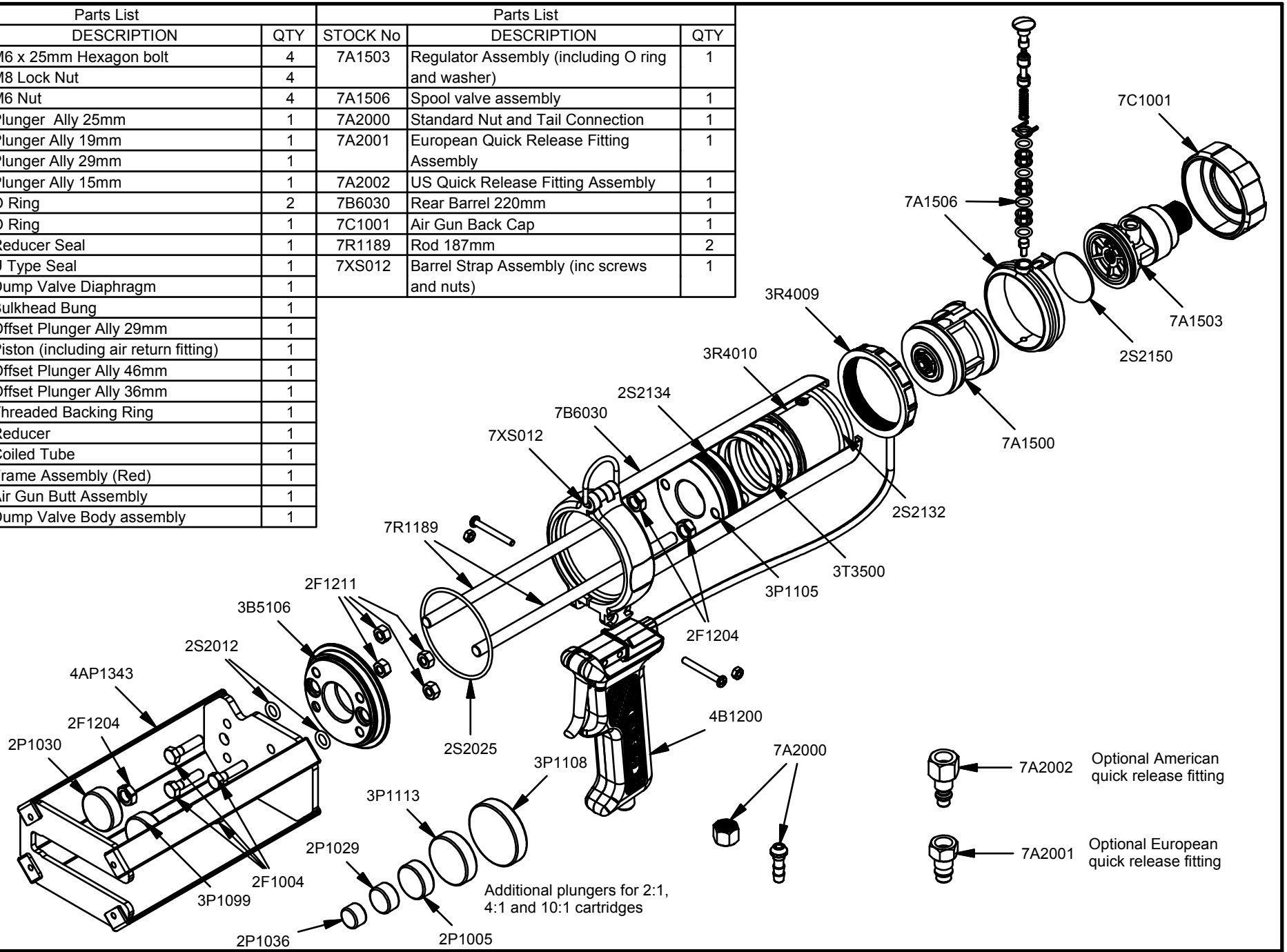

VBA 200 B MR

Quality Sealant Applicators

REV	DATE
A	14/11/2003